Introduction

A. Specifications

System Chipset	Intel 82430 VX chipset.
CPU	One 321-pin socket 7 for Intel Pentium(P54C/CQS/ CS, P55C), AMD 5k86,K5,K6, Cyrix 6x86 (L,MX), IDT C6 processors, support 75/90/100/ 120/133/150/166/200/233MHz.
Memory	Expandable to 128 MB (4 banks) with four 72-pin SIMM sockets onboard (Support Fast Page Mode and EDO DRAM 6-2-2-2) and two 168-pin DIMM socket (support Syncchronous DRAM module 6-1-1-1).
Cache	64-bit 256/512KB L2 Pipeline Burst SRAM onboard.
I/O	ALi 5113 or SMC669, two high speed 16550 compatible serial ports, one Multi-Mode. Parallel Port support SPP/EPP/ECP mode. Two onboard PCI IDE Ports (32 bit data transfer). Support two 360/720KB/1.2/1.44/2.88MB floppy disk devices. One PS/2 Mouse port.
BIOS	Award System BIOS installed in socket (Flash and PnP).
Expansion slots	Three PCI Master Slots and four 16-bit ISA Slots.
Dimension	4-layer PCB, 2/3 baby size (220mm x 230mm).
Others	Support USB Bus.

Setup Guide

A. Layout Diagram

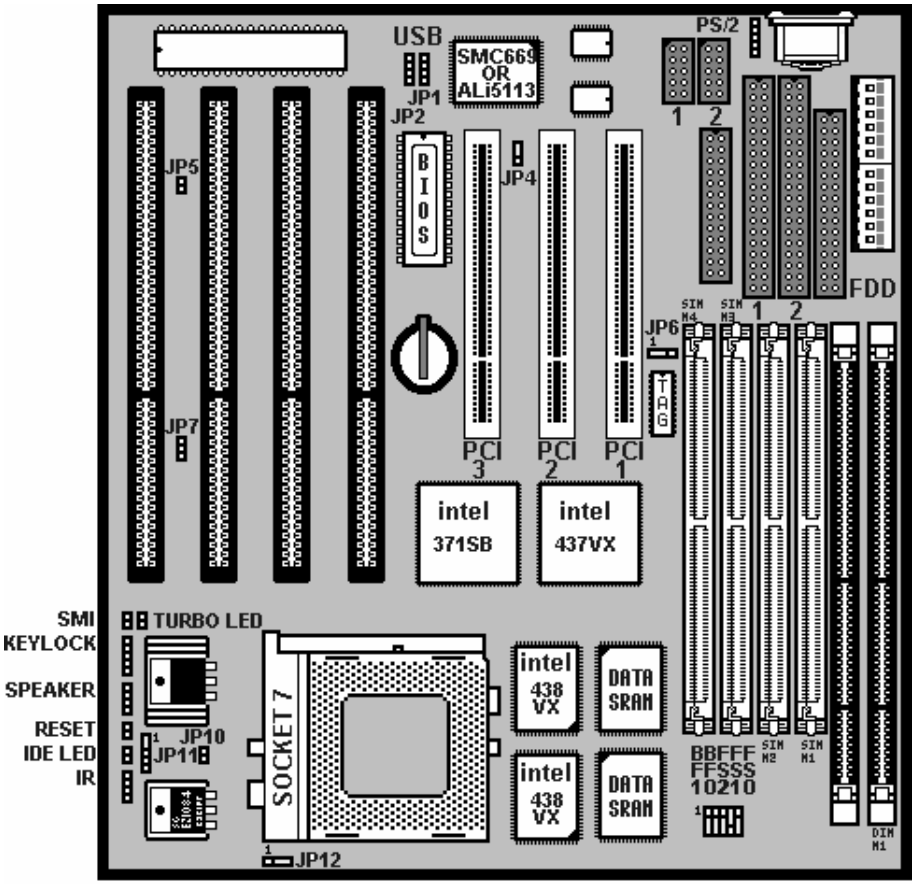

B. IV2 QUICK INSTALLATION GUIDE(SMC 669)

	FS2	FS1	FS0	CLK	BF1	BF0	RATE
Pentium 75 MHz	2-3	2-3	2-3	50	1-2	1-2	1.5
Pentium 90 MHz	2-3	2-3	1-2	60	1-2	1-2	1.5
Pentium 100 MHz	2-3	1-2	2-3	66	1-2	1-2	1.5
Pentium 120 MHz	2-3	2-3	1-2	60	1-2	2-3	2
Pentium 133 MHz	2-3	1-2	2-3	66	1-2	2-3	2
Pentium (MMX) 166 MHz	2-3	1-2	2-3	66	2-3	2-3	2.5
Pentium (MMX) 200 MHz	2-3	1-2	2-3	66	2-3	1-2	3
Pentium (MMX) 233 MHz	2-3	1-2	2-3	66	1-2	1-2	3.5
AMD-5k86-P75-75MHz	2-3	2-3	2-3	50	1-2	1-2	1.5
AMD-5k86-P90-90MHz	2-3	2-3	1-2	60	1-2	1-2	1.5
AMD-K5-75MHz -PR75	2-3	2-3	2-3	50	1-2	1-2	1.5
AMD-K5-90MHz -PR90	2-3	2-3	1-2	60	1-2	1-2	1.5
AMD-K5-100MHz-PR100	2-3	1-2	2-3	66	1-2	1-2	1.5
AMD-K5-90MHz-PR120	2-3	2-3	1-2	60	1-2	1-2	1.5
AMD-K5-100MHz-PR133	2-3	1-2	2-3	66	1-2	1-2	1.5
AMD-K5-115MHz-PR166	2-3	1-2	2-3	66	2-3	2-3	1.75
AMD-K6(MMX)-166MHz	2-3	1-2	2-3	66	2-3	2-3	2.5
AMD-K6(MMX)-200MHz	2-3	1-2	2-3	66	2-3	1-2	3
Cyrix 6x86-100MHz-P120+	2-3	2-3	2-3	50	1-2	2-3	2
Cyrix 6x86-110MHz-P133+	1-2	2-3	2-3	55	1-2	2-3	2
Cyrix 6x86-120MHz-P150+	2-3	2-3	1-2	60	1-2	2-3	2
Cyrix 6x86-133MHz-P166+	2-3	1-2	2-3	66	1-2	2-3	2
Cyrix 6x86-150MHz-P200+	1-2	2-3	1-2	75	1-2	2-3	2
Cyrix MX-150MHz-PR166	2-3	2-3	1-2	60	2-3	2-3	2.5
Cyrix MX-166MHz-PR200	2-3	1-2	2-3	66	2-3	2-3	2.5
Cyrix MX-200MHz-PR233	2-3	1-2	2-3	66	2-3	1-2	3

C. CPU Voltage And Clear CMOS Data

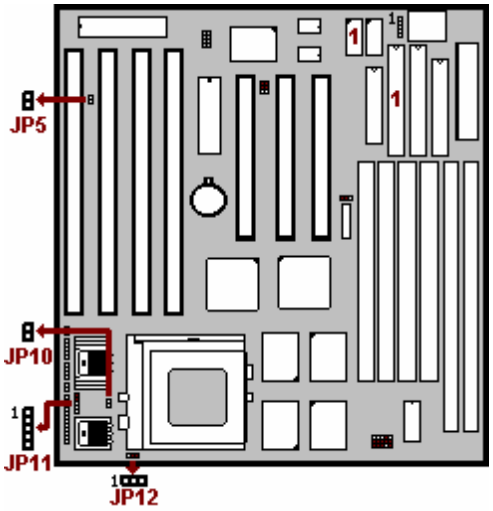

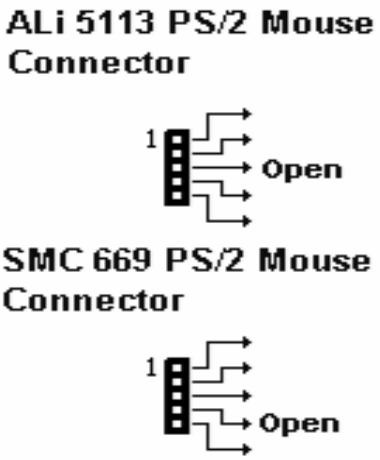

JP5: Clear CMOS

Turn off the system and short pins to clear CMOS. Then short pins before turning it on. You may **damage** the mainboard if you power on the system by shorting pins .

JP5	
Open	Normal operation(Default).
Short	for clearing CMOS Data.

1. 3.38V for 3.3~3.45V CPU, 3.52V for 3.45~3.52V CPU.
2. Dual Voltage for Intel MMX(2.7~2.9V), Cyrix 6x86L(2.63~2.97V), 6x86 MX(2.63~2.97V), AMD K6(2.755~3.045V)CPU.
3. For **Dual Voltage** CPU, **JP10=Open**.

Single Voltage CPU		**3.38V**	**3.45V**	**Dual** Voltage CPU		**2.9V**
Intel **P54C** Cryrix **M1** AMD-**5k86 / K5**	**JP11**			Intel **P55C** Cyrix **6x86L** 6x86 **MX** AMD **K6**	**JP11**	
	JP12				**JP12**	

1. Note for Intel CPUs

586 CPU	Type	V I/O	Vcore	CLK	RATE
Pentium-75	P54C	3.3	None	50	1.5
Pentium-90	P54C	3.3	None	60	1.5
Pentium-100	P54C	3.3 or 3.52	None	66	1.5
Pentium-120	P54C	3.3 or 3.52	None	60	2
Pentium-133	P54C	3.3 or 3.52	None	66	2
Pentium-150	P54C	3.3	None	60	2.5
Pentium-166	P54C	3.3	None	66	2.5
Pentium-200	P54C	3.3	None	66	3
Pentium-166(MMX)	P55C	3.3	2.8	66	2.5
Pentium-200(MMX)	P55C	3.3	2.8	66	3
Pentium-233(MMX)	P55C	3.3	2.8	66	3.5
Pentium-266(MMX)	P55C	3.3	2.8	66	4

➲ The Intel CPUs have six multipliers 1.5/2/2.5/3/3.5/4.

2. Note for Cyrix CPUs

586 CPU	Dual Voltage	V I/O	Vcore	CLK	Rate
Cyrix 6x86-P120+	N	3.3 or 3.52	None	50	2
Cyrix 6x86-P133+	N	3.3 or 3.52	None	55	2
Cyrix 6x86-P150+	N	3.3 or 3.52	None	60	2
Cyrix 6x86-P166+	N	3.3 or 3.52	None	66	2
Cyrix 6x86-P200+	N	3.3 or 3.52	None	75	2
Cyrix 6x86L-P150+	Y	3.3 or 3.52	2.8	60	2
Cyrix 6x86L-P166+	Y	3.3 or 3.52	2.8	66	2
Cyrix 6x86L-P200+	Y	3.3 or 3.52	2.8	75	2
Cyrix MX-PR166	Y	3.3	2.9	60	2.5
Cyrix MX-PR200	Y	3.3	2.9	66	2.5
Cyrix MX-PR233	Y	3.3	2.9	66	3
Cyrix MX-PR266	Y	3.3	2.9	66	3.5

➲ The Cyrix CPUs have four multipliers 2/2.5/3/3.5.

➲ The Cyrix 6x86L is a dual voltage CPU without MMX functions. Its Vcore range is 2.63~2.97V.

3. Note for AMD CPUs

586 CPU	V I/O	V core	CLK	Rate
AMD-5K86-P75-75 MHz	3.52	None	50	1.5
AMD-5K86-P90-90 MHz	3.52	None	60	1.5
AMD-5K86-P100-100MHz	3.52	None	66	1.5
AMD-K5-75MHz-PR75	3.52	None	50	1.5
AMD-K5-90MHz-PR90	3.52	None	60	1.5
AMD-K5-100MHz-PR100	3.52	None	66	1.5
AMD-K5-90MHz-PR120	3.52	None	60	1.5
AMD-K5-100MHz-PR133	3.52	None	66	1.5
AMD-K5-116MHz-PR166	3.52	None	66	1.75
AMD-K6(MMX)-166MHz	3.3	2.9	66	2.5
AMD-K6(MMX)-200MHz	3.3	2.9	66	3
AMD-K6(MMX)-233MHz	3.3	3.2	66	3.5
AMD-K6(MMX)-266MHz	3.3	2.2	66	4
AMD-K6(MMX)-300MHz	3.3 or 3.45	2.2	66	4.5

➲ The AMD CPUs have nine multipliers 1.5/1.75/2.5/3/3.5/4/4.5/5/5.5.

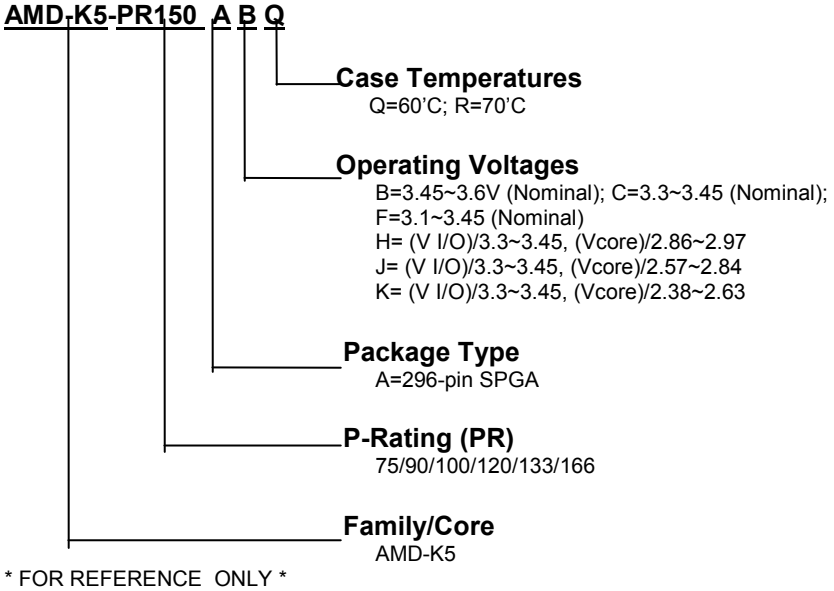

* FOR REFERENCE ONLY *

D. CPU Frequencies

6 ● When a CPU with 75MHz is applied, the PCI Bus CLK output becomes 37MHz. Under this circumstance, some VGA cards may not fit well. Then the system becomes unsteady, tends to hang up easily or even results in

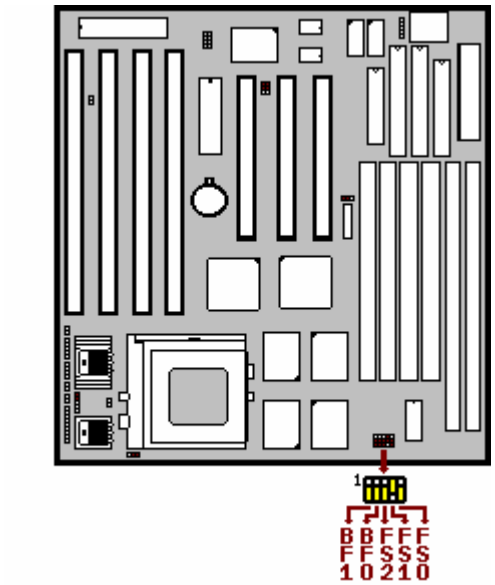

Multipliper Factor for **Intel CPU**							
1.5		**2**		**2.5**		**3**	

Intel P54C/P55C	**X1.5**	**X2**	**X2.5**	**X3**
Cyrix 6x86(L)/MX	None	**X2**	**X2.5**	**X3**
AMD-5k86/K5/K6	**X1.5**	None	**X1.75/X2.5**	**X3**

50 MHz		**55** MHz		**60** MHz	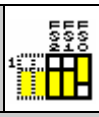	**66** MHz		**75** MHz	
PCI Bus Clk **25**MHz		PCI Bus Clk **27**MHz		PCI Bus Clk **30** MHz		PCI Bus Clk **33** MHz		PCI Bus Clk **37** MHz	

E. DRAM, EDO RAM, Cache Installation Procedures:

- SIMM Socket output voltage is 5V, expandable to 128MB.
- Support 5V Fast Page Mode/ Extended Data Out RAM.
- The BIOS DRAM default setting is 70 ns. Change the

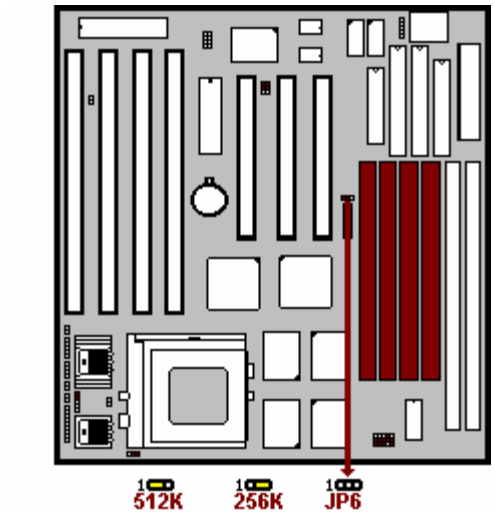

- With 586 CPUs, two FPM/EDO RAM Modules are required on SIMM sockets to compose a bank for the system to start.

- Sync SRAM (Pipeline Burst SRAM)
  If Sync SRAM Modules are installed, they consists of Pipeline Burst 2 PCs 32K x 32-6 for 256KB or 2 PCs 64Kx32-6)

- Cannot mix up SIMM with DIMM since chips limitation.

F. SDRAM Installation Procedures:

- A 168-pin DIMM can support up to 128MB EDO/SDRAM.

- Default setting: 3.3V.

- First, verify the working voltage of the EDO/SDRAM module in either DIMM socket (DIMM1 or

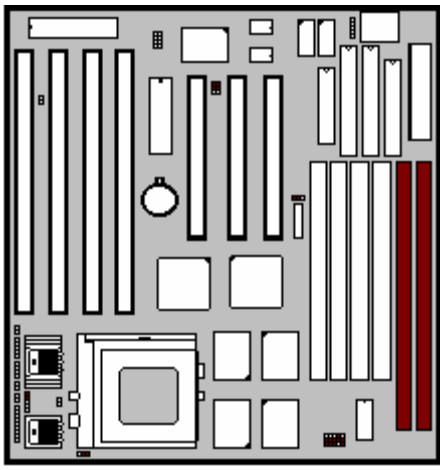

- The Dual Inline Memory Module (DIMM) must be 3.3 Volt and Unbuffered Synchronus DRAM (SDRAM) 8MB, 16MB, 32MB or 64MB. The following illustration shows the type of DIMM Module.

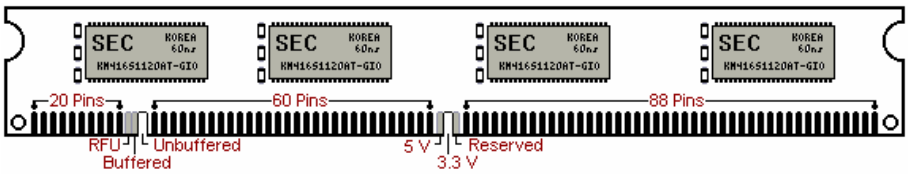

168-PIN SDRAM DIMM Notch Key Definitions

- Cannot mix up SIMM with DIMM since chips limitation.

G. Other Jumper Settings

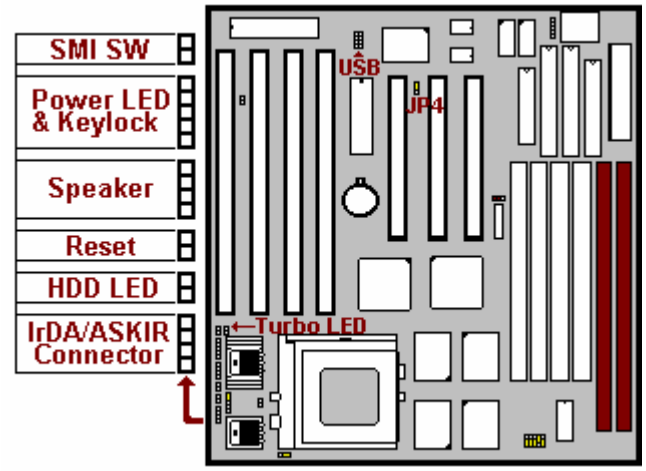

- **SMI SW:**
  Short to enter sleep mode. A keystroke or mouse movement (mouse driver exits) will instantly "wake up" the system.

- **Power LED & Keylock:**
  Keyboard lock switch and Power LED connector.

- **Speaker:**
  Connect to the system's speaker for beeping.

- **Reset:**
  Short to restart system.

- **HDD LED:**
  LED ON when onboard PCI IDE hard disk activates.

- **JP4(Flash BIOS Voltage):**

JP4	
1-2 Short	For 5V Flash BIOS.
2-3 Short	For 12V Flash BIOS